Insights of Electrical Engineering and Technology
https://www.achpub.com/IEET

Research Article

Design and Implementation of an IoT Based Smart Syringe Infusion Pump Prototype for Enhanced Healthcare Support

Mohammad Taziem Hasan*, **Rakib Raihan**, **Md Sajid Hossain**

Department of Electrical & Electronic Engineering, American International University-Bangladesh, Dhaka, Bangladesh
* Correspondence: 20-41889-1@student.aiub.edu

Received: 14 June 2025 **Revised:** 11 September 2025 **Accepted:** 24 September 2025 **Published:** 3 November 2025

Abstract: The development of a portable Internet of Things (IoT)-based smart syringe infusion pump is highlighted in this study. Its goal is to continuously monitor and optimize the delivery of infusion medication. The gadget interfaces with flow, pressure, and accelerometer sensors via an ESP32 microcontroller. This enables real-time data collecting on infusion settings. Essential information is needed by healthcare practitioners to modify treatment plans and guarantee the success of home-based infusion therapy. Even if new studies have shown the promise of medical gadgets that may be utilized at home or in a clinic, current technologies are often cumbersome and costly to use alone. The smart syringe infusion pump takes care of this problem well and provides a cost-effective and useful solution. The device fills the gap between the need for complex and costly infusion technology and the desire for therapies that are conveniently accessible and may be administered at home. A cost-effective and efficient treatment alternative is infusion therapy, which has been made innovative by the integration of sensor technologies into a small, smart infusion pump.

Keywords: infusion; prototype; push; pull; syringe; IoT; realtime; healthcare; telemedicine

1. Introduction

The Internet of Things (IoT)-based syringe infusion pump seems like a novel way to combine medical technology and networking for improved control and monitoring. IoT-capable sensors and actuators would be installed in the infusion pump itself. These sensors may consist of biometric, pressure, and flow rate sensors. The internet can be accessed by the pump via a cellular network or Wi-Fi. The connectivity makes it possible to remotely monitor and manage the pump's performance. A central server or cloud platform can receive data from the pump, including infusion rates, volumes delivered, and any alarms or alerts. Authorities may be able to access and securely store this data. Remote monitoring of the infusion status enables real-time modifications by healthcare providers. Additionally, they can get alerts for any problems. A user interface would be available via a website, or a mobile app. Control choices and real-time data visualization would be available through this interface. Security measures would be put in place by the system to safeguard patient confidentiality and stop illegal access to the device or data. It offers improved safety and monitoring capabilities, increased flexibility for healthcare practitioners, and patient care. These pumps are adjusted with sensors, microcontrollers and IoT gateways that allows real time monitoring, remote control and data collection the key benefit are enhance patient safety and the ability to optimize treatment plans through data analysis IoT base pumps are basically use in the field of biomedical department. The system has prospective benefits that make it viable piece of technology for the health care business going forward, even though there are still concerns to be overcome, such privacy and cost. Syringe infusion pumps have been expressed crucially since the beginning of the early manual. The key milestones include the development of pre-Mechanical pump in the early 1950s, the introduction of electrical control in the 1980s and the adjustment of IoT based pump in recent years. The Internet of things (IoT) has been incredibly successful in recent years in terms of implementation.

A section on Related Research examines previous research on telemedicine, sensors, and inexpensive pumps after the Introduction, which highlights the project's uniqueness in fusing medical technology with IoT for remote monitoring. The Block Diagram and Working Principle and Hardware Setup sections, which describe the system's components (ESP32 cam, stepper motor, Arduino Nano) and physical implementation, include the main body of the article. A section titled "Result Analysis" follows, in which information from the prototypes such as infusion data and patient vitals—is shown and contrasted with previous studies. The project's novelty, its future scope for improvements, and a conclusion describing its importance in advancing telemedicine and improving patient safety are included at the end of the paper, along with a final References section that includes a list of all cited sources.

Copyright: ©2025 by the authors.
https://doi.org/10.64897/ieet.2025v1i1.004
This article is an open access article distributed under the terms and conditions of the Creative Commons Attribution (CC BY) license

2. Related Research

Research on IoT-based syringe infusion pumps covers a wide range of topics, including sensor technologies and data processing, wireless networking and communication, user interface and human-machine interaction, battery life and power management, safety, and regulatory compliance. The GSM/GPRS network and Bluetooth protocol are used by telemedicine systems to monitor patients in real time. A study on telemedicine-enhanced antidepressant management was created for small rural primary care clinics to overcome the difficulties in recruiting mental health professionals on-site and facilitate group depression therapy. The goal of the Telemedicine-Enhanced Antidepressant Management (TEAM) project was to evaluate this approach. This document aims to provide an overview of the TEAM study design [1].

The research investigates the creation and deployment of cloud-based telemedicine systems and wireless sensor networks for distant clinics and medical institutions, reducing geographic limitations and concentrating on impoverished and rural people in developing countries. Medical bands are used by the wireless technology of the WBAN to collect physiological data from sensor nodes.

Healthcare Clinic use a selection of medical bands that minimize interference, allowing sensor node devices to coexist more peacefully with other network devices [2].

The paper introduces a low-cost syringe pressure pump that controls pressure inside microfluidic chips using an Arduino board and feedback control. Using PID and bang-bang control. techniques, the device has demonstrated stability within 5 % and 7 % of the set point, with response times of less than a second. This creative method provides a cost-effective pressure-driven flow control solution [3].

A low-cost syringe pressure pump with feedback control is being developed for microfluidic applications. This programmable pump can be operated using an Arduino board and either a bang-bang control strategy or a PID. The device has shown stability within 5 % of the set point, with response times of less than one second. This inexpensive means of driving and regulating pressure-driven flow via microfluidic chips is ideal for various research fields [4].

The project's main goal is to create an affordable smart syringe pump that can precisely control the flow of fluids like medications and nutrients for use in telemedicine and healthcare. The Arduino Uno's PWM pins allow the stepper motor's delay time to be changed, allowing for the electrospinning of nanofibers. Medical gadget operation is made easier by wireless technology and the Internet of Things [5]. The research suggests a low-cost, variable-delivery syringe pump for small-scale injections that is controlled by an 89S52 microcontroller and a stepper motor. This prototype is perfect for hospital infusion therapy devices since it can be transported overseas and managed locally, minimizing reliance on manufacturers and enabling local design and assembly [6].

Using the Simulink model for two-directional control, the stepper motor—a vital part of the syringe infusion pump—was simulated in MATLAB [7]. Technology advancements have automated routine tasks like home maintenance, traffic management, and agriculture, making them safer, more reliable, and quicker [8]. The IoT-enabled syringe pump system and IoT biomedical wearable system, developed by App Inventor, are revolutionizing healthcare by improving medication accuracy and optimizing drug delivery through real-time alerts [9]. The study focuses on the development of a low-cost smart syringe pump for telemedicine healthcare, utilizing wireless technologies and IoT to improve rural healthcare [10].

To enhance the health of critical care patients, the study highlights the expanding significance of macromixing in biological and chemical applications while presenting a low-cost, multi-channel syringe infusion pump prototype for biomedical applications [11]. Analysis of a Smart Infusion Pump's Rise Time Responses for Dopamine Drug Flow Rate Control. With an emphasis on applying a control system model to regulate medication flow rate and lower pharmaceutical errors, this study attempts to investigate the rise time responses of a smart infusion pump [12]. This information is subsequently utilized to automate and calibrate the anesthesia dosage, thereby minimizing the likelihood of human error. IoT platforms such as Thing Speak, along with mobile applications, facilitate remote oversight, permitting healthcare professionals to monitor and regulate the system from external locations to the Intensive Care Unit (ICU). Additionally, patient data is archived within cloud infrastructures to ensure convenient access and record maintenance; however, this practice engenders apprehensions regarding data security and adherence to regulatory standards [13]. Using microcontrollers like Arduino or Raspberry Pi, these systems analyze real-time patient data, including heart rate, blood pressure, and oxygen saturation, to deliver precise and automated anesthesia dosage. This technology reduces the likelihood of things like brain damage or respiratory arrest by significantly reducing human error. By using secure cloud interfaces to remotely monitor and control the equipment, medical staff can also speed up response times. These advancements offer more efficiency and safety, but they also come with disadvantages, like data security concerns and the need to balance technology and human oversight during medical procedures [14]. A significant advancement in healthcare is represented by smart syringe infusion devices, which use technologies like IoT and machine learning to

enhance medicine administration. Research focusses on developing low-cost systems that use components like DC motors and lead screws to enable precise and controlled fluid administration. Because it enables real-time remote monitoring and control, IoT integration is crucial for reducing human error and enhancing medication adherence. Data confidentiality is also guaranteed via sophisticated communication protocols [15]. The purpose of multiple syringe infusion pumps is to effectively provide different drugs and nutrients to immobilized patients at the same time. Two or more syringes can be accommodated in these devices' arrangement, and each one has its own controls to regulate dose and flow rates precisely. The feature provides flexibility in intricate treatment plans by enabling the sequential and simultaneous infusion of many drugs. To improve safety and performance, major design advances have concentrated on reducing flow errors and increasing mechanical compliance [16]. An important development in healthcare is the semi-automated, self-monitored syringe infusion pump, which combines smart syringe pumps with patient monitoring to improve safety and effectiveness in critical care. Real-time evaluation and prompt medical treatments are made possible by the system's continuous recording of patient parameters and infusion data. IoT technology enables remote monitoring and control, and automation minimizes human mistakes, especially for high-alert medications in high-pressure settings. Accurate medicine distribution and important information notifications are guaranteed by the device's design, which incorporates force sensors and communication units. Though the system has many advantages, which need to be properly handled to prevent patient care from being compromised [17]. Automated Flow Infusion Systems use sensors, the Internet of Things, and machine learning to increase the precision and security of IV therapy. One important feature that significantly reduces human mistakes is the ability to automatically adjust flow rates and issue notifications for issues like blockages or air bubbles. Furthermore, certain systems employ machine learning to offer predictive analytics for fluid requirements, enabling therapy tailored to each patient. These innovations—like Cogni Drip and Drip Control+—have disadvantages, such as the necessity to maintain system dependability and prevent becoming unduly reliant on technology, even while they promise to improve patient safety through continuous monitoring and user-friendly interfaces [18].

3. Block Diagram and Working Principle

Figure 1 integrates components for monitoring and controlling applications in research or pharmaceutical environments, including an Arduino Nano, relay module, ESP32 camera, LCD, switch button, NodeMCU, 12 V battery, and real-time monitoring system. It includes an Internet of Things-based smart syringe infusion pump for correct drug administration, real-time monitoring, and communication. Integrating the pump with electronic health records improves patient care efficiency. The process begins with priming.

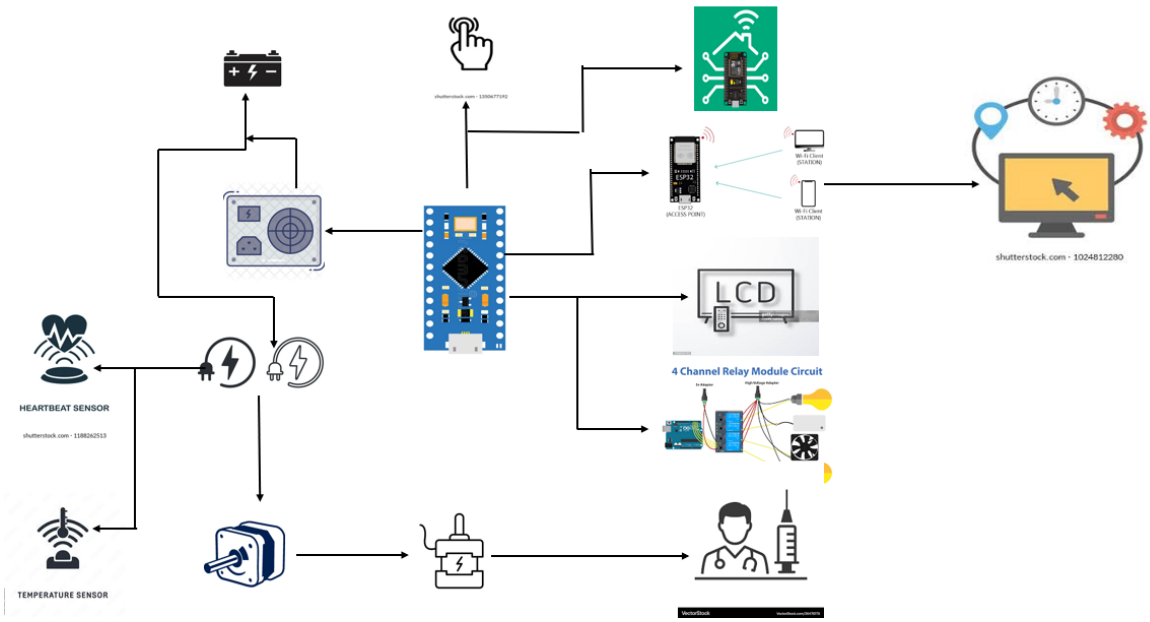

Figure 1. Block Diagram

3.1 *Model*

Figure 2 presents a 3D model of an IoT-based syringe infusion pump, featuring an ergonomically designed infusion mechanism. The pump's small size and low weight make it ideal for medical applications. Sensors match infusion parameters, converting data into electronic signals. Stepper motors control the hypodermic plunger, ensuring precise fluid supply. The model includes wire and connectors.

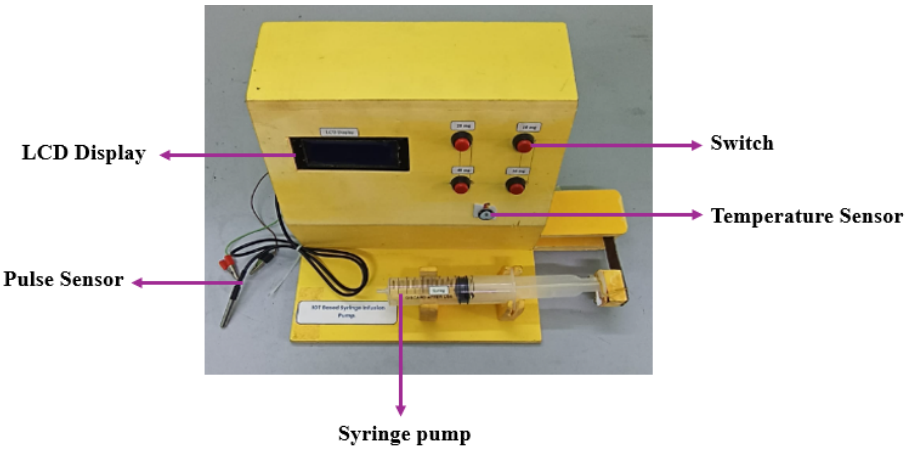

Figure 2. Model of The Proposed Syringe Infusion Pump

3.2 *Simulation*

Extensive analysis and adjustments are required prior to the use of Internet of Things (IoT)-based smart syringe infusion pumps. Different infusion scenarios, interactions, and patient reactions are simulated using simulation frameworks. These simulations of Figure 3 confirm system dependability and appropriate drug delivery. The Circuit diagram uses an Arduino microcontroller, a motor, and other input components is shown in the picture. The Arduino circuit regulates a motor's activity using digital sensors and switches. It can be adjusted using components like resistors or potentiometers. The circuit's precise function depends on the Arduino's code, allowing for various motor control applications in various projects. The precise capability depends on the Arduino's programming.

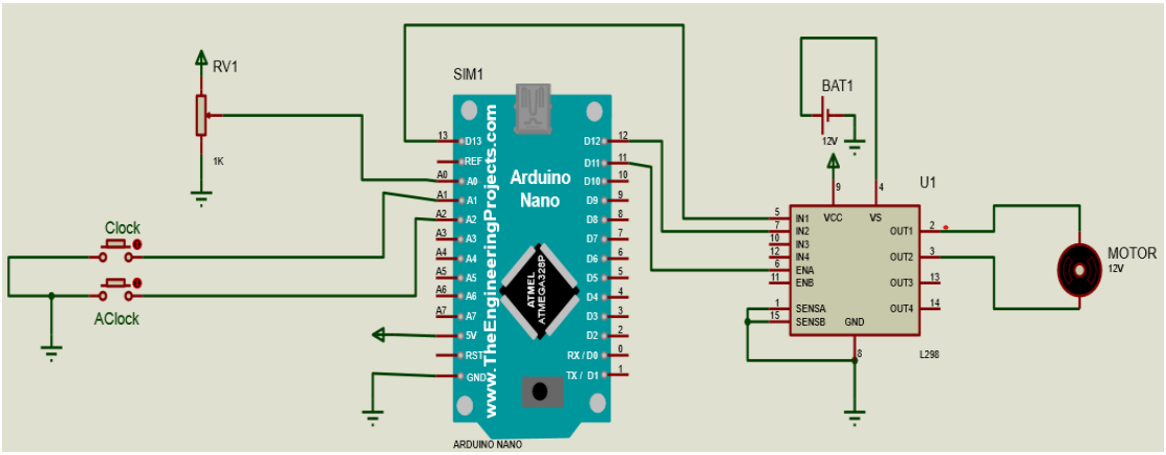

Figure 3. Proteus Simulation Model

3.3 *Flowchart*

The process of flowcharts shown in Figure 4 starts with a "Start" phase and then moves on to a "Initialization" phase, which is when the system gets ready to be used. Following this, the user chooses between "Manual Mode" and "Programming Mode." In Manual Mode, the user is responsible for directly inputting the desired direction (either Forward or Reverse) for the infusion procedure. During the Programming Mode, the user is able to select the desired volume that will be infused. After this, the system moves on to the "Infusion Process," which is where it administers the fluid in accordance with the volume and direction that has been specified. There is a "Restart" option included in the flowchart,

which enables the user to begin a fresh infusion cycle without having to exit the system. At long last, the procedure comes to a close with a ”End” state.

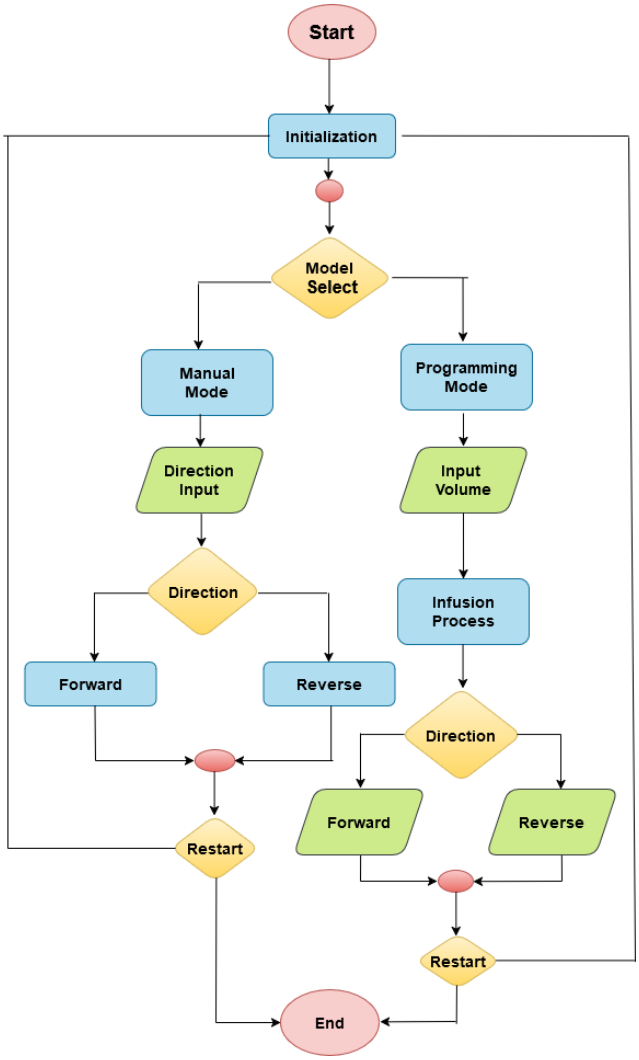

Figure 4. Flowchart of The Proposed Project

4. Hardware Setup

The following describes the methodical and incremental strategy used to implement the project’s hardware model.

A smart syringe infusion pump based on the Internet of Things uses a microcontroller and motorized syringe pump technology to dispense drugs with precision. The system illustrated in Figure 5 and Figure 6 integrates both remote and manual control functionalities. The setup enables automated operation and remote monitoring of the pump system through the combined use of an ESP32 NodeMCU, Arduino Nano, and relay modules. This dual-access configuration enhances the reliability, efficiency, and security of the pump by allowing users to control and monitor performance in real time, either locally through switches and an LCD interface or remotely via network connectivity.

https://doi.org/10.64897/ieet.2025v1i1.004

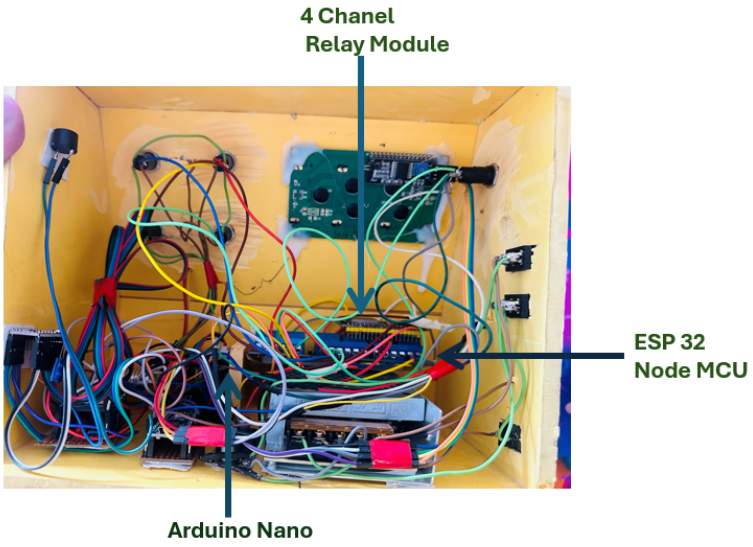

Figure 5. Hardware for remote access setup



Figure 6. Hardware for manual access setup

Figure 7 depicts a model of a syringe infusion pump. A syringe pump, an LCD screen, a switch, a temperature sensor, and a pulse sensor make up this device. The patient's body temperature is tracked using the temperature sensor. The Figures show a state-of-the-art smart syringe infusion pump that has been painstakingly designed to provide accurate liquid amounts in the range of (a) 10 mL, (b) 20 mL, (c) 30 mL and (d) 40 mL. For the precise delivery of medication in a range of medical contexts, this functionality is essential.

https://doi.org/10.64897/ieet.2025v1i1.004

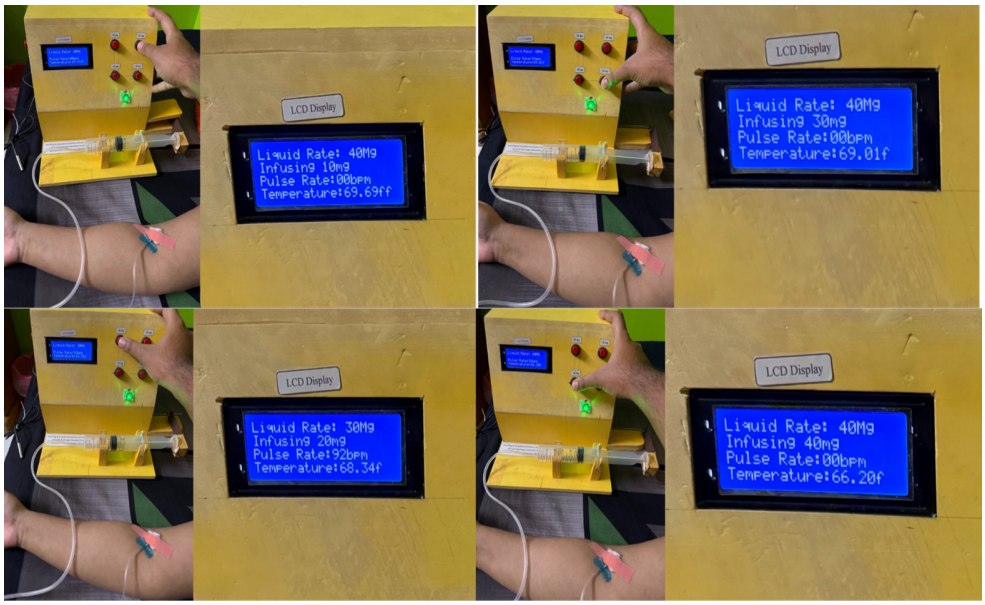

Figure 7. Experimental Process for Infusion Pump of (a) 10 mL, (b) 20 mL, (c) 30 mL and (d) 40 mL

The smart syringe infusion pump in Figure 8 uses an LCD screen for reloading, ensuring steady medication flow. It features safety features like occlusion alarms and low battery notifications, reducing errors and improving treatment outcomes and patient safety.



Figure 8. Real Time Implementation for Reloading Pump

5. Result Analysis

A smart syringe infusion pump is a medical device that gives patients-controlled doses of fluids, like medications or nutrients. These pumps' advanced features, like dosing error-reduction systems and drug libraries, assist decrease medication errors by alerting users to potential issues with the programmed dosages or infusion rates. They are widely used in medical settings to improve the accuracy, safety, and efficacy of fluid administration.

The "Infusion Data Measured Over Time" Table 1 displays the data gathered during an infusion procedure. Each infusion event's serial number, the amount of fluid infused (in milliliters), and the infusion time (in seconds) are all included. As the serial number increases, the data consistently shows an increase in input flow and time pointing to a possible relationship between the two variables.

https://doi.org/10.64897/ieet.2025v1i1.004

Table 1. Infusion Data Measured Over Time

Serial Number	Input Flow (mL)	Time (s)
1	10	20
2	20	40
3	30	60
4	40	80

The ”Comparison of BPM Rate for Different Person” Table 2 shows three individuals’ heart rates at different infusion volumes. Person 1’s rate increases with infusion volume, Person 2 remains steady, and Person 3 experiences a sudden increase.

Table 2. Comparison of BPM Rate for Different Person

Serial Number	Infusion (mL)	Person 1 (age 25)	Person 2 (age 22)	Person 3 (age 27)
1	10	91	87	93
2	20	91	87	93
3	30	92	87	93
4	40	92	86	94
5	50	93	86	94
6	60	93	87	94
7	70	93	87	94
8	80	93	87	94

The graphic Infusion Data Measured Over Time shown in Figure 9 analyzes the pump’s performance across four serial numbers, comparing expected and actual output flow rates. The data shows lower output flow rates proportionate to input, indicating a constant flow rate. However, ongoing dissatisfaction suggests measurement issues or design limitations.

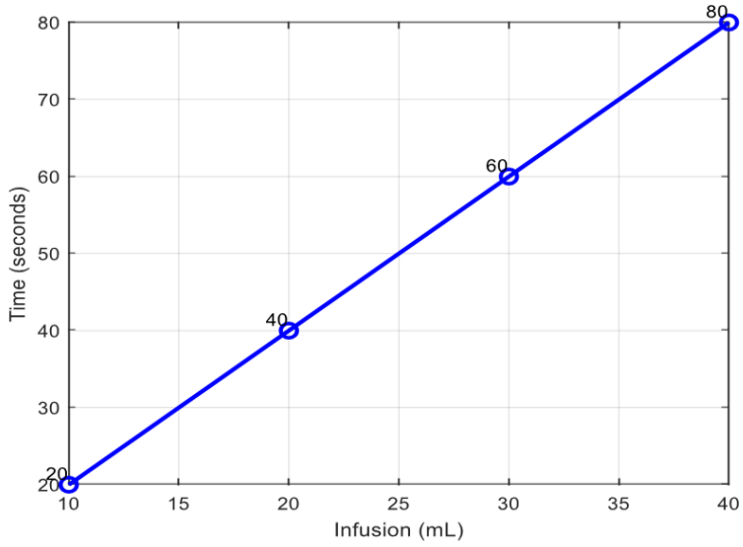

Figure 9. Infusion Data Measured Over Time

The graph displayed in Figure 10 shows the heart rates (BPM) of Persons 1, 2, and 3 as the infusion volume (mL) rises. Person 1’s heart rate initially hovers around 91 BPM, then it gradually increases to 93 BPM after receiving 50 mL of infusion. The heart rate of Person 2 starts out at roughly 91 beats per minute as well, but it quickly increases to 94 beats per minute after consuming 10 milliliters of infusion. After 50 milliliters, it fluctuates between 93 and 94 beats per minute before stabilizing at 94 beats per minute. Person 3 maintains a heart rate of 87 BPM throughout the infusion.

https://doi.org/10.64897/ieet.2025v1i1.004

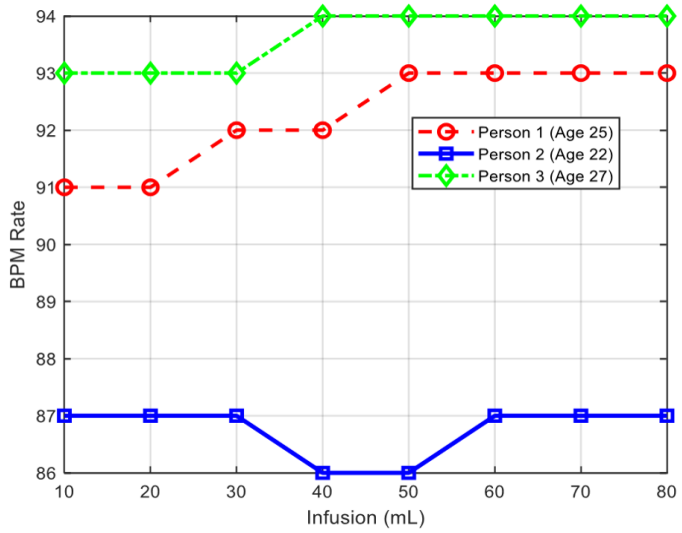

Figure 10. Comparison of BPM Rate for Different Person

Figure 11 shows the comparison of temperatures in different person of ages 25,22 and 27. The graph shows the variation and difference among three persons temperatures.

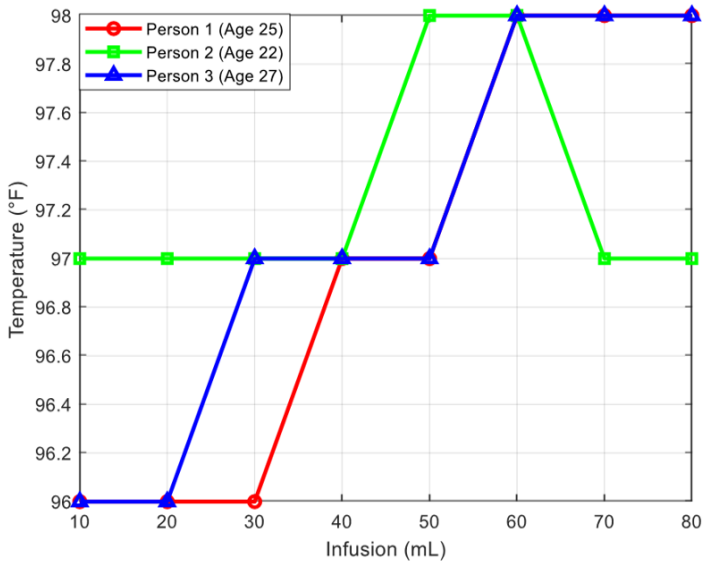

Figure 11. Comparison of Temperature for Different Person

The IoT-based smart syringe infusion pump that employs standards to guarantee patient effectiveness and safety. Medical personnel are notified by the system if a patient's vital signs, such as their temperature (over 98 °F) or heart rate (80–100 BPM), deviate from normal. When the infusion is finished, a buzzer is an essential safety element. The flow rate (10–40 mL) of the pump is expertly managed. An ineffective linear voltage regulator (efficiency 40–70 %) is currently used in the prototype; however, a more effective buck converter (efficiency 85–95 %) could greatly increase battery life.

5.1 *Comparative Study*

Table 3 compares several research projects on the implementation of IoT-based syringe infusion devices. Each row represents different research, and each column represents a certain element or trait the inclusion of a certain feature or component in the study is indicated with a checkbox (✓). The proposed study is the most comprehensive, introducing new features with the pull pump, despite the lack of common features in other studies.

https://doi.org/10.64897/ieet.2025v1i1.004

Table 3. Comparison between proposed and related works

Ref.	Wi-Fi Module	Microcontroller	Temperature sensor	Pulse sensor	Push pump	Pull pump	IoT Dashboard	Real Time monitoring	AC Mode	DC Mode
[19]	✓	✓	-	-	✓	-	✓	-	✓	✓
[20]	-	✓	✓	✓	✓	-	✓	✓	-	✓
[21]	✓	✓	✓	-	✓	-	✓	-	-	✓
[22]	-	✓	-	-	✓	-	-	-	-	✓
[23]	✓	✓	-	-	✓	-	✓	-	-	✓
[24]	-	✓	✓	-	✓	-	-	-	✓	✓
[25]	-	✓	✓	-	✓	-	✓	-	-	✓
[26]	✓	✓	-	-	✓	-	-	✓	-	✓
Proposed	✓	✓	✓	✓	✓	✓	✓	✓	✓	✓

6. Novelty of the Project

The program intends to improve the precision, dependability, and ease of drug delivery by combining the technology of classic injection infusion pumps with the Internet of Things devices that are now available. Through the provision of real-time monitoring, remote management, and advanced data analytics, it exemplifies the potential that Internet of Things-enabled devices hold for the healthcare sector. In addition to this, it enhances the safety of patients and the effectiveness of prescriptions.

7. Future Scope

Smart syringe infusion pumps based on the Internet of Things are poised for future advancements due to their precision, accuracy, remote control, and improved patient safety. As connected device technology advances, these pumps will become more complex and reliable, reducing drug errors and making treatment more accessible in various locations.

8. Conclusion

In conclusion, IoT-based smart syringe infusion pumps represent a significant advancement in medical technology. These pumps significantly enhance patient safety and treatment outcomes by offering remote control, real-time monitoring, and precise medication delivery. The main purpose of this experiment is to deliver the medicine with fixed flow rate in both directions like pushing and pull the syringe pump. Their cultural advocacy of proactive medical management and patient participation encourages healthier lifestyles and better adherence to treatment plans. By removing the need for travel, they minimize pharmaceutical waste and lower carbon emissions through precise drug distribution. These pumps will become even more crucial to contemporary medical services as IoT technology advances, providing patients with dependable, cutting-edge, and eco-friendly care.

Conflicts of Interest: The authors declare no conflict of interest.

References

[1] S. Dubey, A. Gambhir, S. K. Jain, A. V. Jha, A. Jain, and S. Sharma, "IoT application for the design of digital drug administration interface," in *2017 Int. Conf. on Information, Communication, Instrumentation and Control (ICICIC)*, Indore, India, 2017, pp. 1–5. [CrossRef]

[2] A. Dickman and J. Schneider, *The Syringe Driver: Continuous Subcutaneous Infusions in Palliative Care*, 4th ed. Oxford, U.K.: Oxford Univ. Press, 2016. [CrossRef]

[3] K.-K. Liu, R.-G. Wu, Y.-J. Chuang, H. S. Khoo, S.-H. Huang, and F.-G. Tseng, "Microfluidic Systems for Biosensing," *Sensors*, vol. 10, no. 7, pp. 6623–6661, 2010. [CrossRef]

[4] A. Juarez *et al.*, "AutoSyP: A Low-Cost, Low-Power Syringe Pump for Use in Low-Resource Settings," *Am. J. Trop. Med. Hyg.*, vol. 95, no. 4, pp. 964–969, Oct. 2016. [CrossRef]

[5] I. Saidi, L. El Amraoui Ouni, and M. Benrejeb, "Design of an electrical syringe pump using a linear tubular step actuator," *Int. J. Sci. Tech. Autom. Control Comput. Eng.*, vol. 4, no. 2, pp. 1388–1401, Dec. 2010. [Online]. Available: https://www.sta-tn.com/IJ_STA/Papers/volume_4N2_dec_2010/P8_IJ-STA_V4N2_2010.pdf

[6] M. H. Rashid, Ed., *Power Electronics Handbook*. Butterworth-Heinemann.

[7] K. Akash, M. P. Kumar, N. Venkatesan, and M. Venkatesan, "A single acting syringe pump based on Raspberry Pi - SOC," in *2015 IEEE Int. Conf. on Comput. Intell. and Computing Research (ICCIC)*, Madurai, India, 2015, pp. 1–3. [CrossRef]

[8] M. A. Mazidi, J. G. Mazidi, and R. D. McKinlay, *The 8051 Microcontroller and Embedded Systems: Using Assembly and C*, 2nd ed. Pearson.

[9] T. Nihtila *et al.*, "System performance of LTE and IEEE 802.11 coexisting on a shared frequency band," in *2013 IEEE Wireless Commun. and Networking Conf. (WCNC)*, Shanghai, Shanghai, China, 2013, pp. 1038–1043. [CrossRef]

[10] H. Zhang, X. Chu, W. Guo, and S. Wang, "Coexistence of Wi-Fi and heterogeneous small cell networks sharing unlicensed spectrum," *IEEE Commun. Mag.*, vol. 53, no. 3, pp. 158–164, Mar. 2015. [CrossRef]

[11] W. Wu, Y. Gong, and K. Yang, "On constructing a LTE-based experimental network in power distribution systems," in *2013 8th Int. Conf. on Commun. and Networking in China (CHINACOM)*, Guilin, China, 2013, pp. 241–245. [CrossRef]

[12] A. Alshamali, "GSM Based Remote Ionized Radiation Monitoring System," in *2008 Int. Conf. on Adv. in Electron. and Micro-electronics*, Valencia, Spain, 2008, pp. 155–158. [CrossRef]

[13] P. G. Prasuna, K. R. Reddy, M. Mouli, and M. Srilatha, "Low-Cost Anesthesia Machine Using IoT," in *2023 3rd Int. Conf. on Pervasive Computing and Social Networking (ICPCSN)*, Salem, India, 2023, pp. 1261–1266. [CrossRef]

[14] K. Kumuthapriya, R. Porselvi, S. Sasikala, L. Arulmozhiselvan, C. Anitha, and S. Jayasree, "Internet of Things Based Revolutionizing Healthcare Industry with Anesthesia Machine Control: The Future of Medical Technology," in *2024 Int. Conf. on Cybernation and Computation (CYBERCOM)*, Dehradun, India, 2024, pp. 308–313. [CrossRef]

[15] K. S, K. R, S. K, and A. M, "Multiple Syringe Infusion Pump for Immobilized Patients," in *2025 Int. Conf. on Recent Adv. in Electrical, Electron., Ubiquitous Communication, and Comput. Intell. (RAEEUCCI)*, Chennai, India, 2025, pp. 1–7. [CrossRef]

[16] S. Molefinyane, A. Yahya, V. Hamsadhwani, R. Rohini, R. Samikannu, and K. Begam, "Developing a Smart Drip Infusion System to Elevate Precision in Healthcare," in *2024 4th Int. Conf. on Ubiquitous Computing and Intelligent Information Systems (ICUIS)*, Gobichettipalayam, India, 2024, pp. 1929–1934. [CrossRef]

[17] H. ElKheshen, I. Deni, A. Baalbaky, M. Dib, L. Hamawy, and M. A. Ali, "Semi-Automated Self-Monitore - Syringe Infusion Pump," in *2018 Int. Conf. on Computer and Appl. (ICCA)*, Beirut, 2018, pp. 331–335. [CrossRef]

[18] A. Kumari, Q. Memon, Z. Tariq, and S. Kumari, "Development of Smart Syringe Infusion Device for Healthcare," in *2025 Int. Conf. on Emerging Technol. in Electron., Computing, and Communication (ICETECC)*, Jamshoro, Pakistan, 2025, pp. 1–6. [CrossRef]

[19] J. Mohmmad, A. Das, M. Shahriar, S. Howlader, S. Ahmad, and M. S. Hossain, "Anti-Fraud Mechanism Based Voting Machine With Three Stage Authentication Methods," in *2023 26th Int. Conf. on Computer and Information Technol. (ICCIT)*, Cox's Bazar, Bangladesh, 2023, pp. 1–6. [CrossRef]

[20] M. G. Saqlain, M. R. Uddin, A. Mahmood, and M. Hasan, "IoT-Enabled Syringe Pump System: Enhancing Medication Accuracy and Optimizing Drug Delivery with Real-Time Alert System," in *2023 26th Int. Conf. on Computer and Information Technol. (ICCIT)*, Cox's Bazar, Bangladesh, 2023, pp. 1–5. [CrossRef]

[21] K. F. ARBI *et al.*, "Intelligent IoT (I2oT) Biomedical Wearable System based on Smartphone Application," in *2020 IEEE 5th Middle East and Africa Conf. on Biomedical Eng. (MECBME)*, Amman, Jordan, 2020, pp. 1–4. [CrossRef]

[22] M. R. Islam, R. Zahid Rusho, and S. M. R. Islam, "Design and Implementation of Low Cost Smart Syringe Pump for Telemedicine and Healthcare," in *2019 Int. Conf. on Robotics,Electrical and Signal Processing Techniques (ICREST)*, Dhaka, Bangladesh, 2019, pp. 440–444. [CrossRef]

[23] N. Vigneshwari, V. Saranraj, A. M. Ibrahim, and K. Girivasan, "Low cost, On-Demand and Intermittent Drug Delivery System through Syringe Infusion for Improving the Health of Critical Care Patients," in *2019 IEEE Int. Conf. on Intelligent Techniques in Control, Optimization and Signal Processing (INCOS)*, Tamilnadu, India, 2019, pp. 1–5. [CrossRef]

[24] H. T. Thanh, L. Do Quang, and A. N. Ngoc, "Development of a Low-Delivery-Rate Triple Syringe Infusion Pump for Biomedical Applications," in *2021 3rd Int. Symp. on Material and Electrical Eng. Conf. (ISMEE)*, Bandung, Indonesia, 2021, pp. 277–282. [CrossRef]

[25] J. V. Alamelu, M. Asaithambi, and R. Swaminathan, "Analysis of Rise Time Responses of a Smart Infusion Pump for the Control of Dopamine Drug Flow Rate," in *2022 IEEE Int. Symp. on Medical Measurements and Appl. (MeMeA)*, Messina, Italy, 2022, pp. 1–5. [CrossRef]

[26] P. Deepakfranklin and M. Krishnamoorthi, "Monitoring Multiple Biomedical Parameter to Automate Anesthesia Injector Using FPGA," in *2018 Int. Conf. on Computer, Communication, and Signal Processing (ICCCSP)*, Chennai, 2018, pp. 1–5. [CrossRef]

https://doi.org/10.64897/ieet.2025v1i1.004